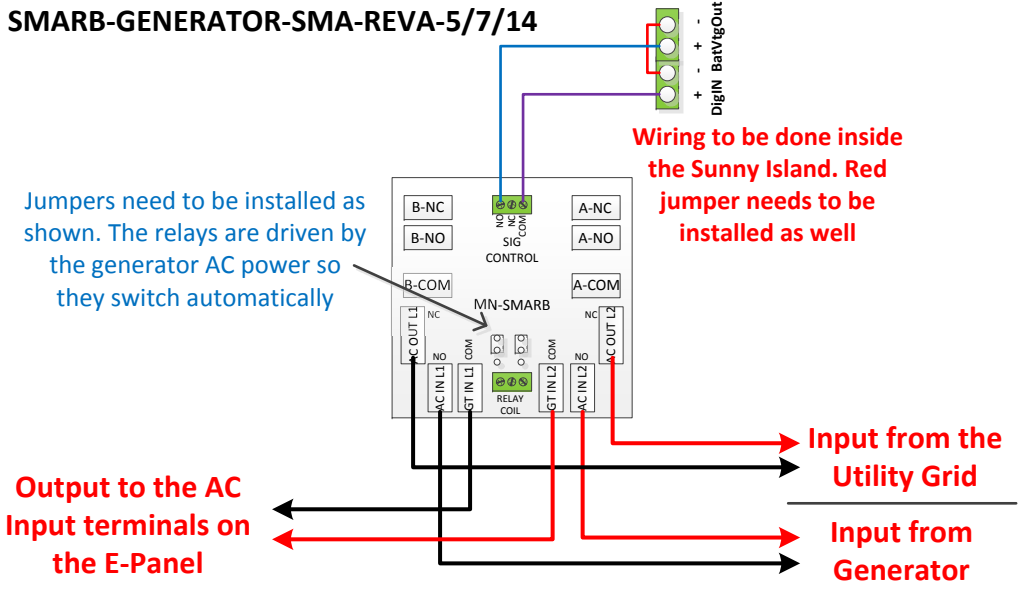SMARB-GENERATOR-SMA-REVA-5/7/14