GSCM-mini-60/i

THIS VERSION WILL LOOK AT PL RUN STATUS SIGNAL - REMOTE CABLE CONNECTION

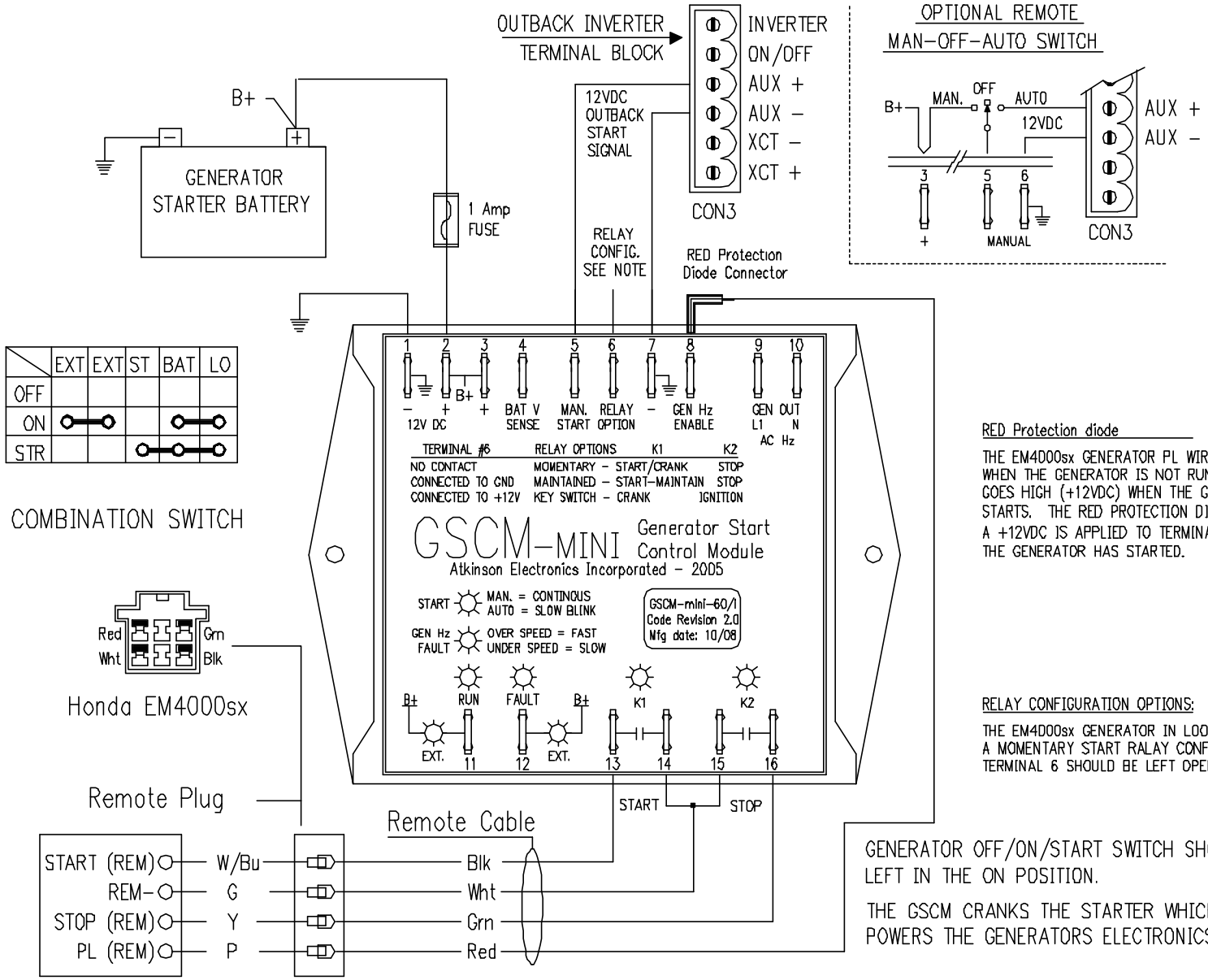

RED Protection diode

THE EM4000sx GENERATOR PL WIRE IS OPEN WHEN THE GENERATOR IS NOT RUNNING, AND GOES HIGH (+12VDC) WHEN THE GENERATOR STARTS. THE RED PROTECTION DIODE ENSURES A +12VDC IS APPLIED TO TERMINAL B WHEN THE GENERATOR HAS STARTED.

RELAY CONFIGURATION OPTIONS:

THE EM4000sx GENERATOR IN LOOKING FOR A MOMENTARY START RALAY CONFIGURATION TERMINAL 6 SHOULD BE LEFT OPEN

GENERATOR OFF/ON/START SWITCH SHOULD BE LEFT IN THE ON POSITION.

THE GSCM CRANKS THE STARTER WHICH THEN POWERS THE GENERATORS ELECTRONICS

EM4000SX

REVISIONS | DATE | APPD | DRAWN BY | DESIGNED BY | SALES ENG. | DATE | CONTRACTOR | JOB NO. | SHEET OF

1 2 3 DCMS ENGR.

AUTHORIZED DISTRIBUTOR FOR: STALTFA CONTROL SYSTEM

ATKINSON ELECTRONICS INC.
ENGINEERED AUTOMATIC CONTROL SYSTEMS
14 WEST VINE STREET
MURRAY, UTAH 84107
(801) 281-3800