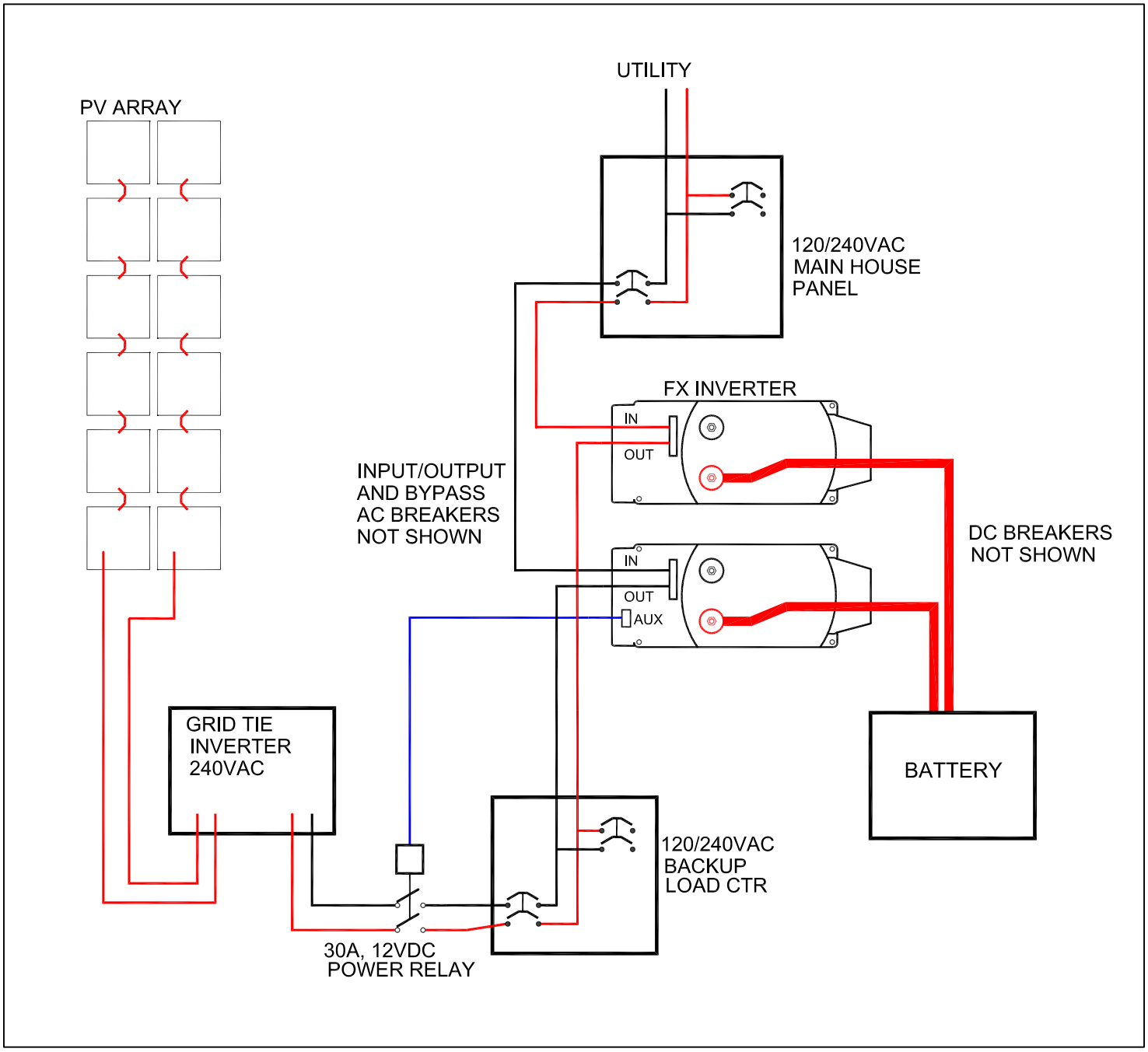
UTILITY
PV ARRAY
120/240VAC
MAIN HOUSE
PANEL
FX INVERTER
IN
OUT
INPUT/OUTPUT
AND BYPASS
AC BREAKERS
NOT SHOWN
DC BREAKERS
NOT SHOWN
IN
OUT
AUX
GRID TIE
INVERTER
240VAC
BATTERY
120/240VAC
BACKUP
LOAD CTR
30A, 12VDC
POWER RELAY